Machine shop motor failures

Application Note

Power Quality **Case Study**

Measuring tools: Fluke 43B Power Quality Analyzer

Operator: Motor rewind shop supervisor

Features used: Voltage, current, harmonic spectrum and THD

Problem description

Motor failures can be mysterious. Often, the mechanical loads on the motors have not changed and other loads connected to the same service appear to work normally — yet, the motors just fail. The cause of these mysterious failures is frequently a power quality deficiency. Consequently, the motor rewind industry has become involved in power quality troubleshooting. In this case history, the supervisor of a motor rewind shop investigated a rash of failures at a small machine shop.

His investigation process began with a series of questions to search for any pattern that might be common to the failed units, and to see what had changed since the time before the problem surfaced.

Often, the pattern is one of age. In this case, there was no age pattern — some of the failed motors were nearly new. Others were much older, and some of these had been rewound at the motor shop. But, there was a pattern: all the failed units had been carrying full mechanical loads and the windings showed evidence of overheating.

The machine shop itself hadn't undergone any changes. But an insurance company had moved into a new building next door. And they had done so at about the time when the motor failures began. The same utility transformer supplied both buildings (see Fig. 1).

Measurements

The motor shop supervisor suspected that non-linear loads within the insurance building were distorting the voltage being supplied to the machine shop. He connected his Fluke 43B phase-to-phase at the machine shop's main service panel. The Fluke 43B showed

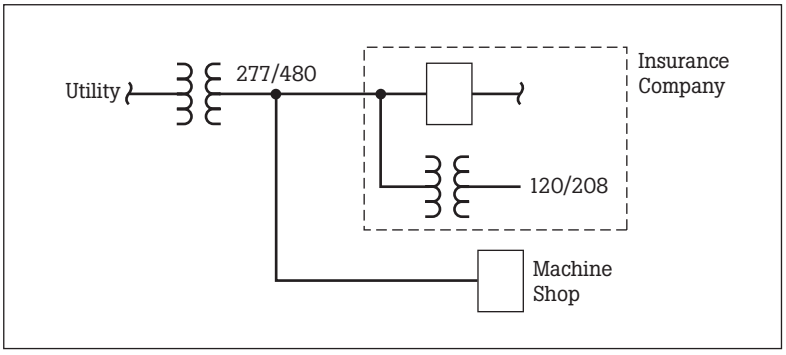

Fig. 1 Utility connections for the machine shop and insurance company

the voltage waveform was flat-topped, with a total harmonic distortion (THD) of 7.8 %. It's significant to note that the 5th harmonic was the dominant bar on the harmonics display — a fact key to the analysis of the problem.

The supervisor made some additional measurements on motors operating in the machine shop. He compared the current drawn by fully loaded motors to the full load amps (FLA) value shown on the nameplates. The measured values were, by a small amount, consistently higher than the nameplate values.

Theory and analysis

The 5th harmonic is "negative sequence" when compared to the fundamental. That is, 5th harmonic current flowing in a 3-phase induction motor will produce a magnetic field that tries to run the motor backwards. In effect, the torque produced by the 5th harmonic subtracts from the torque generated by the fundamental. This causes the motor to draw more fundamental current to offset the negative torque. The additional current produces additional internal heating.

In the case of the machine shop, non-linear loads in the neighboring insurance building caused 5th harmonic distortion on the supply voltage. Computer and office machine loads connected to the 120 V receptacles were generating 3rd, 5th, 7th, 9th, and 11th harmonic currents. When these currents reached the 120/208 V transformer, the balanced portion of the zero sequence harmonics (e.g., 3rd, 9th) were trapped in the delta primary but the 5th, 7th, and 11th passed through. These reached the secondary of the utility transformer, where they caused the voltage distortion measured at the machine shop service.

Most standard induction motors require supply voltage distortion (THD) to be 5 % or less, if the motor carries a full mechanical load. This means harmonic distortion on the utility voltage must be no more than 5 %, if the end-user facility has fully loaded induction motors.

Solution

The utility, when notified about the voltage distortion problem, agreed to install a separate transformer serving only the machine shop. The Fluke 43B showed voltage distortion on the new transformer was only 3.3 % — less than half of the previous value.

Fluke. *Keeping your world up and running.*

Fluke Corporation
PO Box 9090, Everett, WA USA 98206

Fluke Europe B.V.
PO Box 1186, 5602 BD
Eindhoven, The Netherlands

For more information call:
In the U.S.A. (800) 443-5853 or
Fax (425) 446-5116
In Europe/M-East/Africa (31 40) 2 675 200 or
Fax (31 40) 2 675 222
In Canada (800)-36-FLUKE or
Fax (905) 890-6866
From other countries +1 (425) 446-5500 or
Fax +1 (425) 446-5116
Web access: http://www.fluke.com/

©2003 Fluke Corporation. All rights reserved.
Printed in U.S.A. 8/2003 2103564 A-ENG-N Rev A

Pub-ID: 11593-eng